PRODUCT SPECIFICATION

# MIL-DTL-38999 Series III Connector, d38999-26fc35pn Male Plug, No.13 Shell 22 Pin Crimp, Nickel, N Orientation

PART NUMBER

**D38999-26FC35PN**

## Basic Information

| | |
|---|---|
| **Series** | MIL-DTL-38999 Series III |
| **Connector Type** | Plug |
| **Orientation** | Straight |
| **Contact Type** | Male |
| **Number Of Positions** | 22 |
| **Shell Size** | 13 |
| **Contact Layout** | 13-35 |
| **Fastening Type** | Thread |

TECHNICAL SPECIFICATIONS

# Specifications

## Basic Information CONTINUED

| | |
|---|---|
| **Mount Type** | Cable |
| **Contact Termination** | Crimp |
| **Key** | N |

## Material Specification

| | |
|---|---|
| **Shell Material** | Aluminum Alloy |
| **Shell Finish** | Cadmium olive drab |
| **Insulation Material** | PPS |
| **Contact Material** | Copper Alloy |
| **Contact Finish** | Gold |
| **Shell Color** | Olive Drab |

## Environmental Specification

| | |
|---|---|
| **Protection Rating** | IP67 |
| **Operating Temperature** | -65℃ to +175℃ |

## Eletronic Specification

| | |
|---|---|
| **Shielding** | Shield |
| **Rated Current** | 5A |

TECHNICAL REFERENCE

# Technical Drawings

## Contact Layout

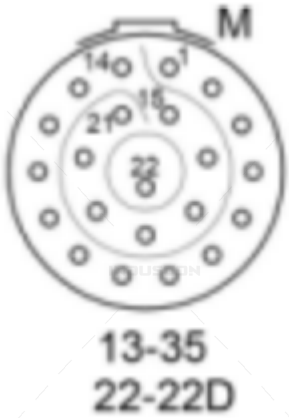


## Size

EMI Shielding Plug (D38999/26)

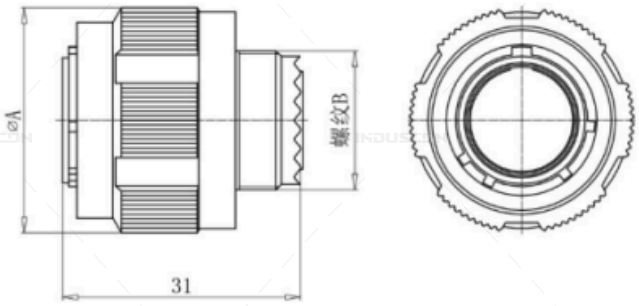


| Shell size | MS Shell size | A | Thread B |
|---|---|---|---|
| 09 | A | 21.5 | M12×1.0-6g |
| 11 | B | 25.0 | M15×1.0-6g |
| 13 | C | 29.2 | M18×1.0-6g |
| 15 | D | 32.4 | M22×1.0-6g |
| 17 | E | 35.6 | M25×1.0-6g |
| 19 | F | 38.5 | M28×1.0-6g |
| 21 | G | 41.7 | M31×1.0-6g |
| 23 | H | 44.9 | M34×1.0-6g |
| 25 | J | 48.0 | M37×1.0-6g |

**Disclaimer**

The information in this specification is subject to change without notice. Please confirm the latest version before use. Technical parameters are for reference only, and sufficient testing and verification should be conducted in actual applications.