PRODUCT SPECIFICATION

MIL-DTL-38999 Series III Connector, d38999-26fa98sn Female Plug, No.9 Shell 3 Pin Crimp, Nickel, N Orientation

PART NUMBER

D38999-26FA98SN

Basic Information

Series	MIL-DTL-38999 Series III
Connector Type	Plug
Orientation	Straight
Contact Type	Female
Number Of Positions	3
Shell Size	9
Contact Layout	9-98
Fastening Type	Thread

TECHNICAL SPECIFICATIONS

Specifications

Basic Information CONTINUED

Mount Type	Cable
Contact Termination	Crimp
Key	N

Material Specification

Shell Material	Aluminum Alloy
Shell Finish	Cadmium olive drab
Insulation Material	PPS
Contact Material	Copper Alloy
Contact Finish	Gold
Shell Color	Olive Drab

Environmental Specification

Protection Rating	IP67
Operating Temperature	-65℃ to +175℃

Eletronic Specification

Shielding	Shield
Rated Current	5A

TECHNICAL REFERENCE

Technical Drawings

Contact Layout

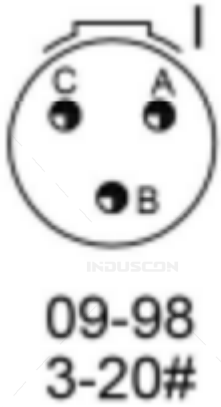

Size

EMI Shielding Plug (D38999/26)

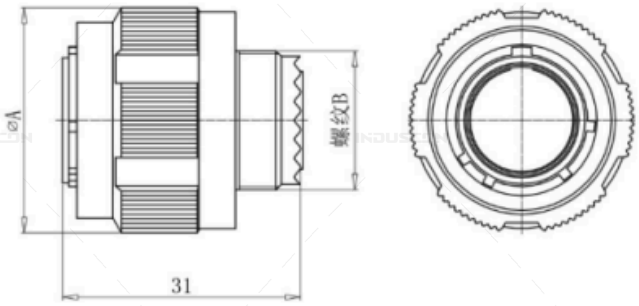

Shell size	MS Shell size	A	Thread B
09	A	21.5	M12×1.0-6g
11	B	25.0	M15×1.0-6g
13	C	29.2	M18×1.0-6g
15	D	32.4	M22×1.0-6g
17	E	35.6	M25×1.0-6g
19	F	38.5	M28×1.0-6g
21	G	41.7	M31×1.0-6g
23	H	44.9	M34×1.0-6g
25	J	48.0	M37×1.0-6g

Disclaimer

The information in this specification is subject to change without notice. Please confirm the latest version before use. Technical parameters are for reference only, and sufficient testing and verification should be conducted in actual applications.