SMP Male RF Coaxial Connector Printed Circuit Board - RHT-628-0034

Drawing

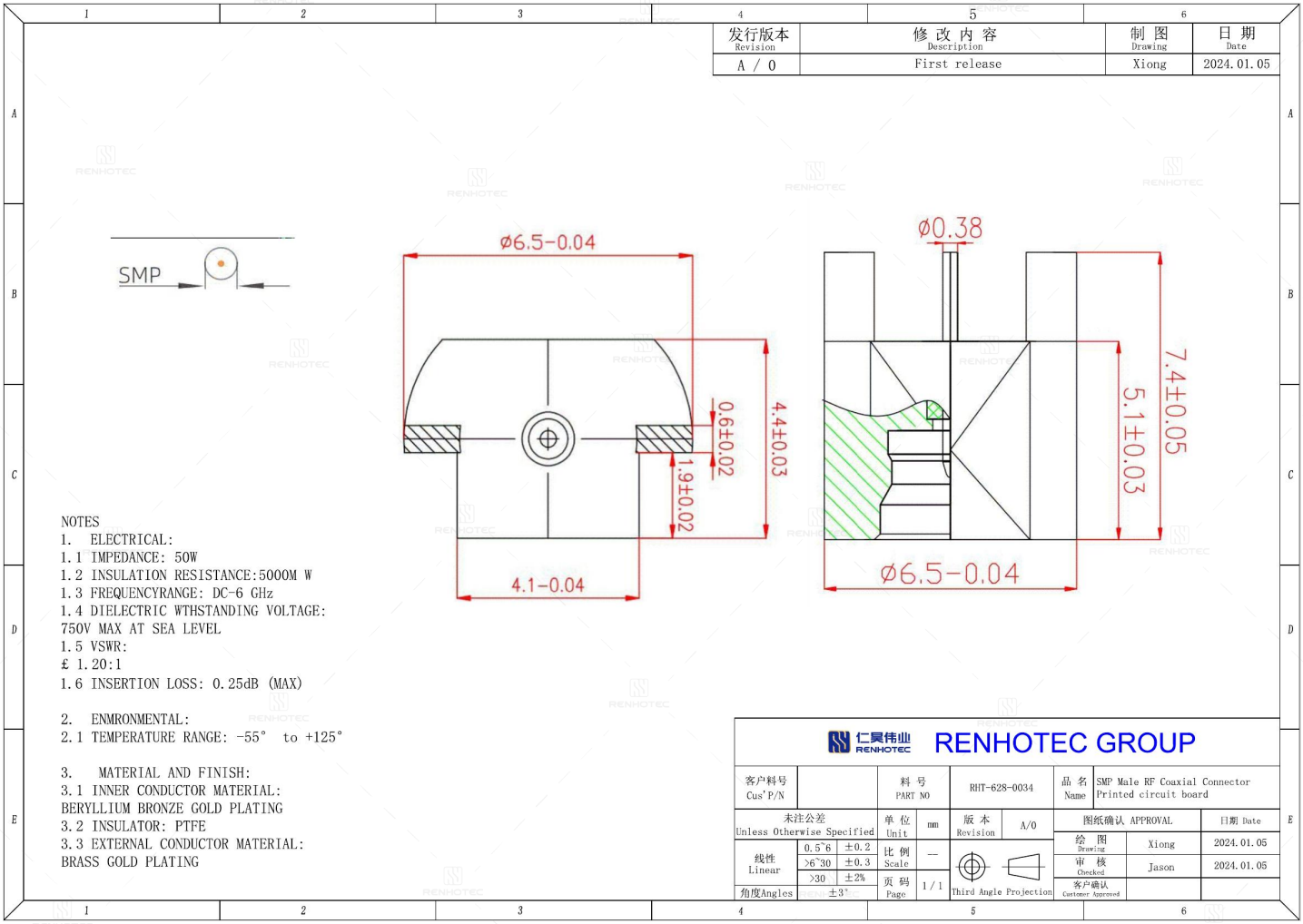

Basic Information

Connector Type	Plug
Mounting Type	Panel Mount
Orientation	Straight
RF Series	SMP Type

Electrical Specification

Dielectric Withstanding Voltage	750 V MAX at sea level
Insertion Loss	0.25dB MAX

Environmental Specification

Temperature Range	-55°C to +125°C

Material and Finish

Component Description	Material	Finish
Outer Conductor	Brass	-
Outer Contact	-	Gold Plated
Insulator	PTFE	-
Contact	Beryllium Bronze	Gold Plated

Impedance Testing

Impedance	50 ohm

Frequency & VSWR Test Report

Frequency Range	DC-6GHz
VSWR	1.5 MAX

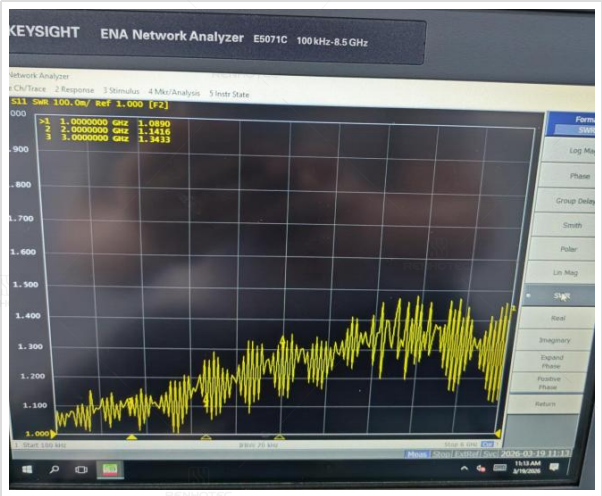

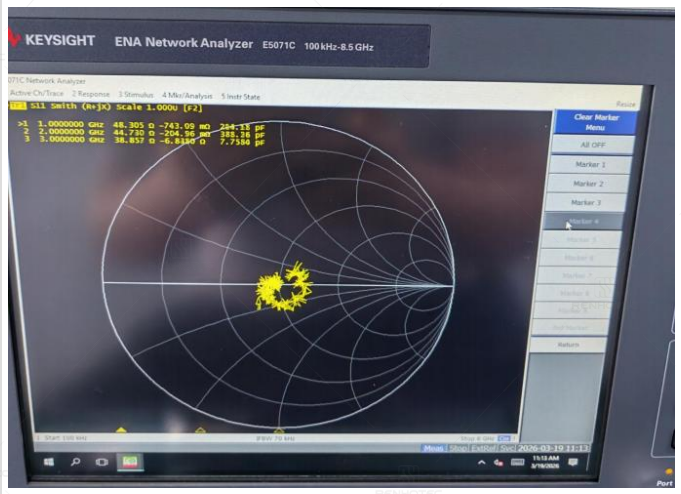

Contact Resistance Test

Contact Type	Male Pin

Working Voltage & Insulation Resistance Test

Insulation Resistance	5000MΩ Min

Disclaimer

The information in this specification is subject to change without notice. Please confirm the latest version before use. Technical parameters are for reference only, and sufficient testing and verification should be conducted in actual applications.