M12 Female Single-ended Cable with Cat 5e S/FTP Ethernet EMI-Shielded Angled PVC/PUR

Part Number:

RHT-605-10058-4D

Basic Information	
Cable Colour	Green/Customized
Contact Termination	Solder Cup
Contact Type	Female
Key	D
Number of Positions	4 Pin
Orientation	Angled

Material Specification	
Cable Material	PVC/PUR/Customized
Contact Finish	Gold
Contact Material	Brass
Insulation Material	PA66+GF
Overmolding Material	PVC/TPU
Screw Nut Material	Nickel Plated, Zinc
Seal	FKM
Wire Gauge	22AWG/0.34mm^2

Electrical Specification	
Contact Resistance	≤5MΩ
Insulation Resistance	≥100MΩ
Rated Current	4A
Rated Voltage	250V
Shielding	EMI-Shielded

Mechanical Specification

Mating Cycles	≥500

Environmental Specification

Protection Rating	IP67(Mated)
Temperature range	'-25℃ ~ +80℃

Contact Layout

Size

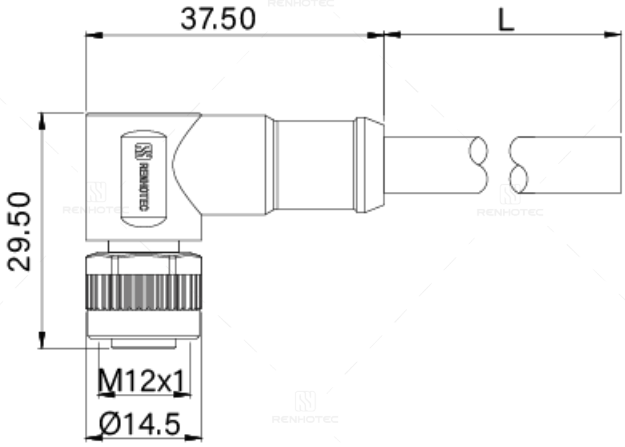

Disclaimer

The information in this specification is subject to change without notice. Please confirm the latest version before use. Technical parameters are for reference only, and sufficient testing and verification should be conducted in actual applications.