M12 Male to Dsub25 Molded Cable

Basic Information

Cable Colour	Black/Customized
Contact Termination	Solder Cup
Contact Type	Male
Orientation	Straight

Material Specification

Cable Material	PVC/PUR/Customized
Contact Finish	Gold
Contact Material	Brass
Insulation Material	PA66+GF
Overmolding Material	PVC/TPU
Screw Nut Material	Brass, Nickel Flash
Seal	FKM
Wire Gauge	24AWG/0.25mm2

Electrical Specification

Contact Resistance	≤5MΩ
Insulation Resistance	≥100MΩ
Rated Current	2A
Rated Voltage	30V
Shielding	Shielded

Mechanical Specification

Mating Cycles	≥500

Environmental Specification

Protection Rating	IP67 (Mated)
Temperature range	'-25℃ ~ +80℃

Size

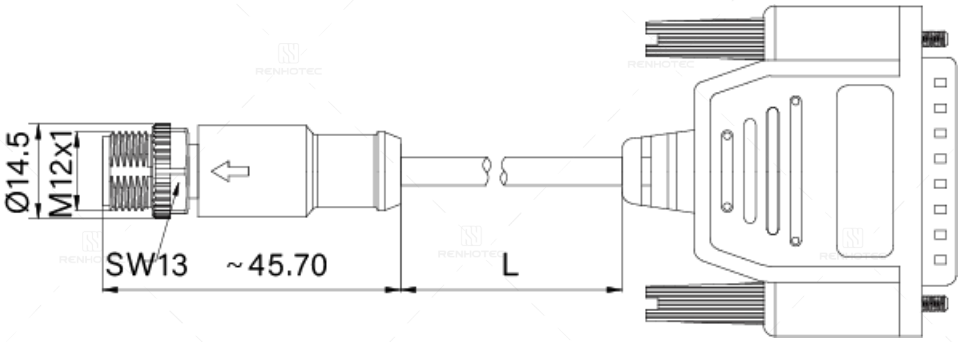

Disclaimer

The information in this specification is subject to change without notice. Please confirm the latest version before use. Technical parameters are for reference only, and sufficient testing and verification should be conducted in actual applications.