M12 Female Panel Mount Receptacle with Wires Rear Fastened Straight

Basic Information	
Contact Termination	Solder Cup
Contact Type	Female
Key	A, B, D
Number of Positions	12 Pin, 17 Pin, 2 Pin, 3 Pin, 4 Pin, 5 Pin, 6 Pin, 8 Pin
Orientation	Straight

Material Specification	
Body Material	Brass, Nickel Plated
Contact Finish	Gold
Contact Material	Brass
Insulation Material	PA66+GF
Seal	Black, NBR
Wire Material	PVC

Electrical Specification	
Contact Resistance	≤5MΩ
Insulation Resistance	≥100MΩ
Shielding	Unshielded

Mechanical Specification	
Mating Cycles	≥500

Environmental Specification

Protection Rating	IP67(Mated)
Temperature range	'-40℃ ~ +85℃

Contact Layout

Pins	Rated current	Rated voltage		Wire gauge		Female Contact			Male Contact		
		AC	D/C	AWG	mm²	A-Code	B-Code	D-Code	A-Code	B-Code	D-Code
2	4A	250V	250V	22	0.34						
3	4A	250V	250V	22	0.34						
4	4A	250V	250V	22	0.34						
5	4A	60V	60V	22	0.34						
6	2A	30V	30V	24	0.25						
8	2A	30V	30V	24	0.25						
12	1.5A	30V	30V	26	0.14						
17	1.5A	30V	30V	26	0.14						

Size

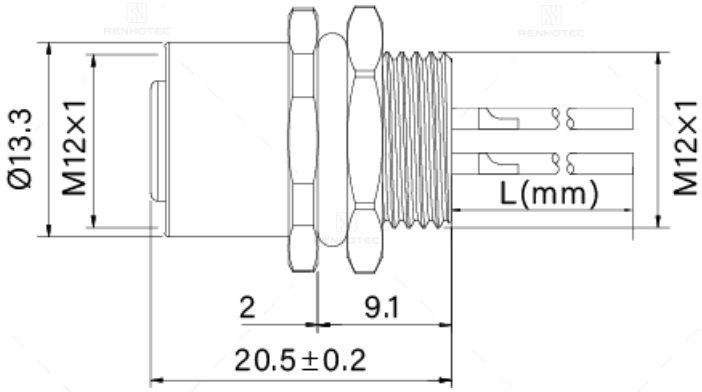

Disclaimer

The information in this specification is subject to change without notice. Please confirm the latest version before use. Technical parameters are for reference only, and sufficient testing and verification should be conducted in actual applications.