J14F Metal Shell 27pin Micro-D MIL-Spec Cable Mount Female Socket J14F-27ZKL

Part Number:

J14F-27ZKL

Basic Information	
Color	Primary Color
Connector Type	Socket
Contact Termination	Soldering
Contact Type	Female
Mounting Type	Free Hanging
Number of Cores	27
Number of Interface Rows	3
Orientation	Straight

Environmental Specification	
Operating Temperature	-55℃~+125℃

Material Specification	
Contact Plating	Gold-plated
Housing Material	Aluminum Alloy
Housing Plating	Nickel-plated

Electrical Specification	
Contact Resistance	≤ 10MΩ
Insulation Resistance	≥ 2000MΩ
Rated Current	2A
Withstand Dielectric Voltage	500V

How to Order

Part Number Structure: J14F-15ZJB

J	**Series Prefix** Product series designation code.
14	**Design Series Number** Identifies the design series of the connector.
F	**Modification / Revision Code** Indicates the modification or variant revision of the base design.
-15	**Number of Contacts** Total contact position count (e.g. -15 = 15 contacts).
Z	**Connector Type** Z = Receptacle (socket housing) | T = Plug (pin housing)
J	**Contact Type** K = Socket contact (female) | J = Pin contact (male) — both supplied with cable leads
B	**Mounting Style** B = Panel mount | L = Cable type

Contact Layout

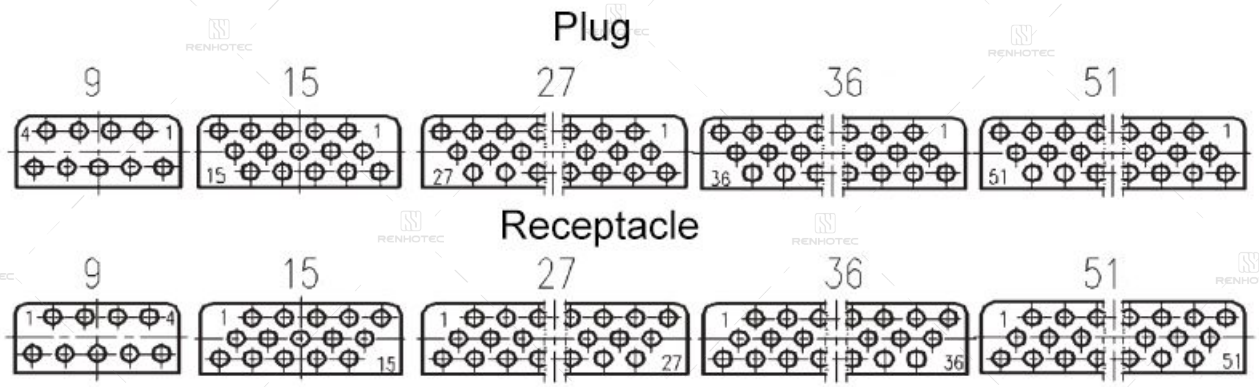

Disclaimer

The information in this specification is subject to change without notice. Please confirm the latest version before use. Technical parameters are for reference only, and sufficient testing and verification should be conducted in actual applications.