J14 Series J14F Metal Shell 15pin Micro-D MIL-Spec Male Plug

Part Number:

J14F-15TJ

Basic Information

Color	Primary Color
Connector Type	Plug
Contact Termination	Soldering
Contact Type	Male
Mounting Type	Free Hanging
Number of Cores	15
Number of Interface Rows	3
Orientation	Straight

Environmental Specification

Operating Temperature	-55℃~+125℃

Material Specification

Contact Plating	Gold-plated
Housing Material	Aluminum Alloy
Housing Plating	Nickel-plated

Electrical Specification

Contact Resistance	≤ 10MΩ
Insulation Resistance	≥ 2000MΩ
Rated Current	2A
Withstand Dielectric Voltage	500V

How to Order

Part Number Structure: J14F-15ZJB

J	**Series Prefix** Product series designation code.
14	**Design Series Number** Identifies the design series of the connector.
F	**Modification / Revision Code** Indicates the modification or variant revision of the base design.
-15	**Number of Contacts** Total contact position count (e.g. -15 = 15 contacts).
Z	**Connector Type** Z = Receptacle (socket housing) | T = Plug (pin housing)
J	**Contact Type** K = Socket contact (female) | J = Pin contact (male) — both supplied with cable leads
B	**Mounting Style** B = Panel mount | L = Cable type

Contact Layout

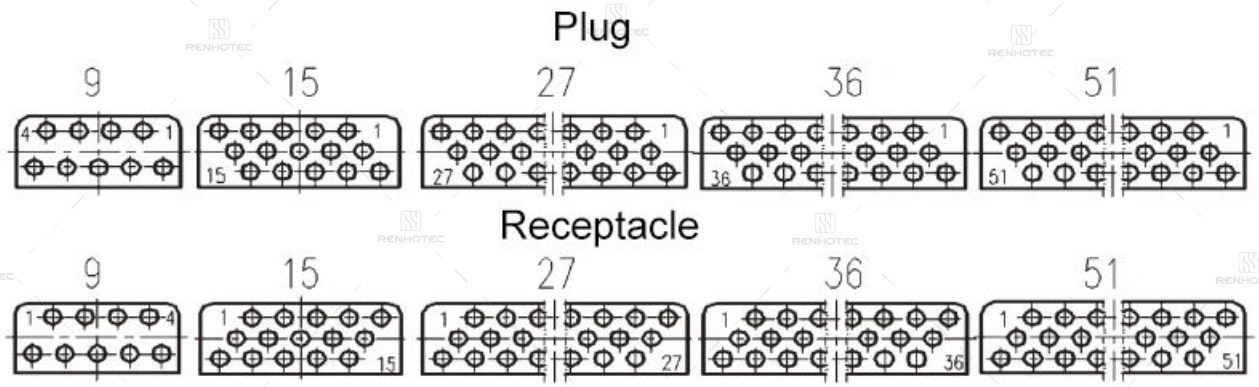

Disclaimer

The information in this specification is subject to change without notice. Please confirm the latest version before use. Technical parameters are for reference only, and sufficient testing and verification should be conducted in actual applications.